Serial Port to HID Keyboard and Mouse Chip CH9329

Datasheet
Version: V1.1
http://wch.cn

1. Introduction

CH9329 is a UART to standard USB HID device (keyboard, mouse, custom HID) chip. According to different operating modes, it can be identified as the standard USB keyboard device, USB mouse device or custom HID device on the computer. CH9329 receives serial port data sent from the client and according to the HID device specification, the data will be packaged and then transmitted to the computer via USB port. Though the provided computer software, users can also configure the chip operating mode, serial communication mode, serial communication baud rate, various timeout periods, VID, PID, and various USB string descriptors.

The figure below shows the diagram of its general application.

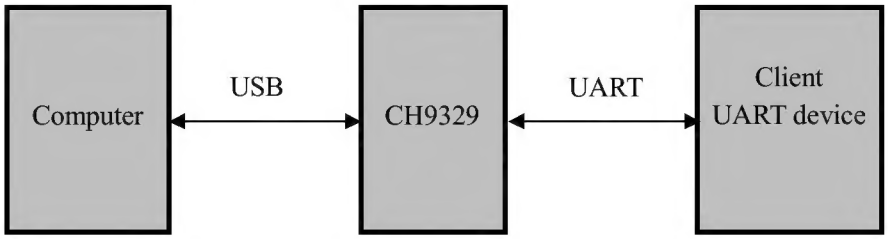

2. Features

- Supports 12Mbps full-speed USB transmission, USB 2.0compatible, built-in crystal oscillator.
- Default serial baud rate is 9600bps, which supports various common baud rates.
- Supports 5V and 3.3V power voltage.
- Multiple chip operating modes to adapt to different application requirements.
- Flexible switching among multiple serial communication modes.
- Supports normal keyboard and multimedia keyboard function, and supports full keyboard function.
- Supports absolute mouse and relative mouse functions.
- Supports custom HID device functions, which can be used for pure data transmission.
- Supports ASCII code characters input and section-position code Chinese characters input.
- Supports remote computer wake-up function.
- Supports to configure VID, PID, and various USB string descriptors of chip.
- Supports to configure default baud rate of chip.
- Supports to configure communication address of chip to realize multiple chips hanged on the same serial port.
- Supports to configure “Enter” character.
- Supports to configure filter string to filter invalid characters conveniently.
- Complies with USB related specifications and HID device related specifications.
- RoHS compliant SOP-16 lead-free package.

3. Package

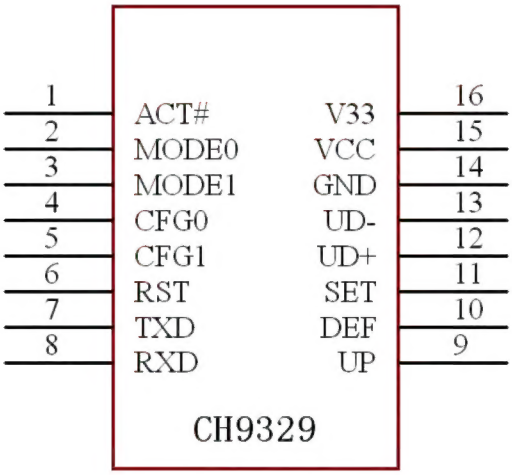

Package	Body size		Lead pitch		Description	Part No.
SOP16	3.9mm	150mil	1.27mm	50mil	Small outline 16-pin patch	CH9329

4. Pin definitions

Pin No.	Pin Name	Pin Type	Pin Description
1	ACT#	Output	USB configuration completed status output, active low
2	MODE0	Input	Chip operating mode configuration pin 0, used with MODE1 pin, built-in pull-up resistor
3	MODE1	Input	Chip operating mode configuration pin 1, used with MODE0 pin, built-in pull-up resistor
4	CFG0	Input	Chip serial communication mode configuration pin 0, used with CFG1 pin, built-in pull-up resistor
5	CFG1	Input	Chip serial communication mode configuration pin 1, used with CFG0 pin, built-in pull-up resistor
6	RST	Input	External reset input pin, active high, built-in pull-down resistor
7	TXD	Output	Serial data output
8	RXD	Input	Serial data input, built-in pull-up resistor
9	UP	Output	USB data packet upload success indication pin. A packet of data is successfully uploaded every time, the pin level flips once. Note: If the chip needs to work under 3.3V, a 4.7K pull-down resistor must be added to this pin to ground.
10	DEF	Input	Chip parameter restore factory setting pin. Pull down for more than 3s to restore the parameters of factory default settings, built-in pull-up resistor
11	SET	Input	Chip parameter configuration pin, active low, built-in pull-up resistor In any mode, the chip will automatically switch to "Protocol transmission mode" when it detects that the pin is at low level, and the client serial port device can conduct parameter configuration.
12	UD+	USB signal	Connect to USB D+ Signal directly

13	UD-	USB signal	Connect to USB D- Signal directly
14	GND	Power	Ground
15	VCC	Power	Power supply voltage input, requires an external 0.1uF decoupling capacitor
16	V33	Power	Internal USB power regulator output and internal USB power input, connect to VCC when VCC is 3V3, connect to 0.1uF decoupling capacitor when VCC is 5V

5. Function descriptions

CH9329 has integrated power-on reset circuit. After the reset is completed, CH9329 works according to the currently configured operating mode and serial communication mode.

When CH9329 uses 5V supply voltage, the V33 pin externally connects with decoupling capacitor with a capacity of about 0.1uF. When using 3.3V supply voltage, theV33connects with VCC, inputs 3.3V power supply at the same time.

ACT# pin of CH9329 is the status output of USB device configuration completion that indicates that the USB device has successfully connected to the computer.

CH9329 has integrated independent transmit-receive buffer and supports simplex, half-duplex and full duplex UART communication. Serial data contains one low-level start bit, 8 data bits, and one high-level stop bit. The default baud rate is 9600bps. It supports common communication baud rates: 1200, 2400, 4800, 9600, 14400, 19200, 38400, 57600 and 115200(Note: 115200bps is not supported when the chip works under 3.3V power supply). The baud rate error of the serial port transmitting signal is less than 0.3%, and the allowable baud rate error of the serial port receiving signal is not more than 2%.

CH9329 has integrated a related firmware for UART-to-USB HID communication, which is a simple solution for UART-to-HID device. It also has integrated all the peripheral circuits required by the USB bus, including PLL and 24MHz USB clock, serial matching resistors for D+ and D-signals and 1.5KΩ pull-up resistor for Device, etc, and integrated crystal oscillator. The peripheral circuit is simple.

CH9329 complies with related technical specifications and supports plug-and-play. The Windows/Linux/Android/MAC OS has pre-installed with the corresponding drivers and can be used with the corresponding software after connection.

Operating mode configuration and description:

Operating Mode	MODE1 Level	MODE0 Level	Function Description
Mode 0	1	1	**Simulate standard USB keyboard + USB mouse device + USB custom HID device (default)** In this mode, CH9329 is identified as a multi-functional composite device for USB keyboard, USB mouse and custom HID device on the computer. The USB keyboard contains ordinary keys and multimedia keys, and the USB mouse contains relative mouse and absolute mouse. This mode has the comprehensive functions and can realize all the functions for USB keyboard and USB mouse.
Mode 1	1	0	**Simulate standard USB keyboard device** In this mode, CH9329 is identified as a single USB keyboard device on the computer. The USB keyboard contains only

			ordinary keys and no multimedia keys. It supports full keyboard mode and is suitable for some systems that do not support composite devices.
Mode 2	0	1	**Simulate standard USB keyboard + USB mouse device** In this mode, CH9329 is identified as a multi-functional composite device for USB keyboard and USB mouse on the computer. The USB keyboard contains ordinary keys and multimedia keys, and the USB mouse contains relative mouse and absolute mouse. Note: Linux/Android/MAC OS, this mode is recommended.
Mode 3	0	0	**Simulate standard USB custom HID device** In this mode, CH9329 is identified as a single USB custom HID device on the computer. It has two channels for uploading and downloading, and can realize the serial port and HID data transparent transmission function. If CH9329 receives serial port data, it will be packaged and uploaded via USB; and if it receives USB download data, it will be sent via serial port.

If MODE0 and MODE1 pins are suspended, the chip works in MODE0 by default.

Description of serial communication mode configuration:

Serial Communication Mode	CFG1 Level	CFG0 Level	Function Description
Mode 0	1	1	**Protocol transmission mode (default)** In this mode, when the customer's serial port device sends serial data to CH9329, it must be sent according to the protocol format. Otherwise, it will be discarded directly. For the specific protocol format, refer to "CH9329 Serial Communication Protocol_Vx.x.PDF". This mode is generally suitable for applications that need to use both the USB keyboard and USB mouse functions. If you need to use the full keyboard function, this mode is also recommended.
Mode 1	1	0	**ASCII mode** In this mode, when the customer's serial port device sends serial data to CH9329, it can send ASCII code characters data, or section-position code Chinese characters data. This mode is suitable for applications that only need to use the visible ASCII characters in the USB keyboard.
Mode 2	0	1	**Transparent transmission mode** In this mode, when the customer's serial port device sends serial data toCH9329, it can be any hexadecimal data. This mode is suitable for applications that the CH9329works in operating mode 3.

If CFG0 and CFG1 pins are suspended, CH9329 works in serial communication mode 0 by default.

If CH9329 is currently working in "ASCII mode" or "Transparent transmission mode", you need to switch to "protocol transmission mode" for parameter configuration. You can first set the SET pin to low level (after the chip detects that the SET pin is at low level, it will automatically switch to the "protocol transmission mode"), and then perform configuration. After canceling the low level of the SET pin, the chip will work according to the newly set serial communication mode.

If you need to restore the parameter configuration of CH9329 to the factory default settings, it can be done via the following two steps:

① Set the DEF pin to low level more than 3S;

② Restore the DEF pin to high level and wait for 200ms,all parameter configurations are automatically restored to the factory default settings;

CH9329 has 4 operating modes and 3 serial communication modes, for the convenience of customers, it is recommended to use the following recommended combinations.

Chip Operating Mode	Serial Communication Mode(suggest priority from top to bottom)	Recommended Description
Mode 0	Mode 0 Mode 1 Mode 2	1. If you need to use the USB keyboard and USB mouse functions at the same time, you can only use serial communication mode 0 (protocol transmission mode), which can realize all the functions of the USB keyboard and USB mouse, including full keyboard, multimedia key and absolute mouse function; 2. If you only use the USB ordinary keyboard function, you can also use serial communication mode 1 (ASCII mode). In this mode, the serial data must conform to the ASCII character format; 3. If you only use the USB ordinary keyboard function, you can also use serial communication mode 2 (transparent transmission mode). In this mode, every 8 bytes of serial data form a packet. After the chip receives 8 bytes, it will directly package and upload them via USB port. Therefore, the serial data must be sent according to the standard USB keyboard data packet. For example, simulating "A" pressed, the serial port sends data packets: 0x00, 0x00, 0x04, 0x00, 0x00, 0x00, 0x00, 0x00; For example, simulating "A" released, the serial port sends data packets: 0x00, 0x00, 0x00, 0x00, 0x00, 0x00, 0x00, 0x00;
Mode 1	Mode 1 Mode 0 Mode 2	1. If the USB keyboard only needs to use the visible ASCII function, you can use serial communication mode 1 (ASCII mode), which is the simplest and most convenient; 2. If the USB keyboard needs to achieve full keyboard function, you can use serial communication mode 0

		(protocol transmission mode);
Mode 2	Mode 0	If CH9329 works in chip operating mode 2, it only supports serial communication mode 0 (protocol transmission mode);
Mode 3	Mode 2 Mode 0	If the amount of uploaded data is large and the speed requirement is faster, it is recommended to use serial communication mode 2 (transparent transmission mode). In this mode, CH9329 can receive up to 400 bytes of data at a time, and then upload it in packets;

Through the provided PC software, the user can customize the chip parameters such as operating mode, serial communication mode, serial communication baud rate, serial communication address, multiple timeout periods, "Enter" character, whether to "Enter" automatically, filter start and end characters, VID, PID, and various USB string descriptors, etc. After configuring the chip parameters, they will be permanently stored inside the chip and will not be lost even if power-off, unless it is reconfigured or restored factory settings, the new configuration will take effect after the next power-on or external reset. If it has not been set, the chip's default operating mode, USB VID, PID and USB string descriptor will be enabled. For specific configuration methods, please refer to the provided software.

6. Parameters

6.1. Absolute maximum ratings

（Critical state or exceeding maximum can cause chip to not work or even be damaged）

Name	Parameter Description	Min	Max	Unit
TA	Operating ambient temperature	-40	85	℃
TS	Storage ambient temperature	-55	125	℃
VCC	Supply voltage (VCC connects to power, GND to ground)	-0.4	5.5	V
VIO	Voltage of other input or output pins except for UD+/UD-	-0.4	VCC+0.4	V
VIOU	Voltage of UD+/UD- pin	-0.4	V33+0.4	V

6.2. Electrical characteristics

(Test Conditions: TA=25℃, VCC=5V, exclude pins connected to USB bus)

Name	Parameter Description	Min	Typ.	Max	Unit
VCC	Supply voltage	3.7	5	5.5	V
V33	Internal USB power regulator output voltage	3.14	3.27	3.4	V
ICC	Static supply current	8	11		mA
VIL	Input low voltage	-0.4		1.2	V
VIH	Input high voltage	2.4		VCC+0.4	V
VOL	Output low voltage (8mA draw current)			0.4	V
VOH	Output high voltage (8mA output current)	VCC-0.4			V
IUP	Input current of input with built-in pull-up resistor	35	70	140	uA
IDN	Input current of input with built-in pull-down resistor	-35	-70	-140	uA
Vpot	Voltage threshold of power-up reset	2.1	2.3	2.5	V

7. Application

7.1. UART to HID device

The figure below shows the schematic diagram that CH9329 realizes UART- to -HID device (keyboard, mouse and HID).

P1 is USB port, USB bus contains a pair of 5V power lines and a pair of data signal lines. Usually, the color of +5V power line is red, the black one is ground. D+ signal line is green and the D- signal line is white. The max supply current provided by USB bus is up to 500mA. Generally, CH9329 and low-power USB products can directly use the 5V power supplied by USB bus. If the USB products use standing power provided by other supply methods, CH9329also can use this power. If the USB bus power and standing power are necessary at the same time, connecting a 1Ω resistor between 5V power line of USB bus and 5V standing power line of USB product, and directly connecting the ground lines of two powers

P2 is TTL serial port, RXD is the serial receiving pin and TXD is the serial transmitting pin of CH9329.

The capacity of C1 is 0.1μF, which is used for the internal power node decoupling of CH9329, and the capacity of C2 is 0.1μF, which is used for the external power decoupling. Resistor R1 and LED1 are optional and are only used to indicate the USB connection status.
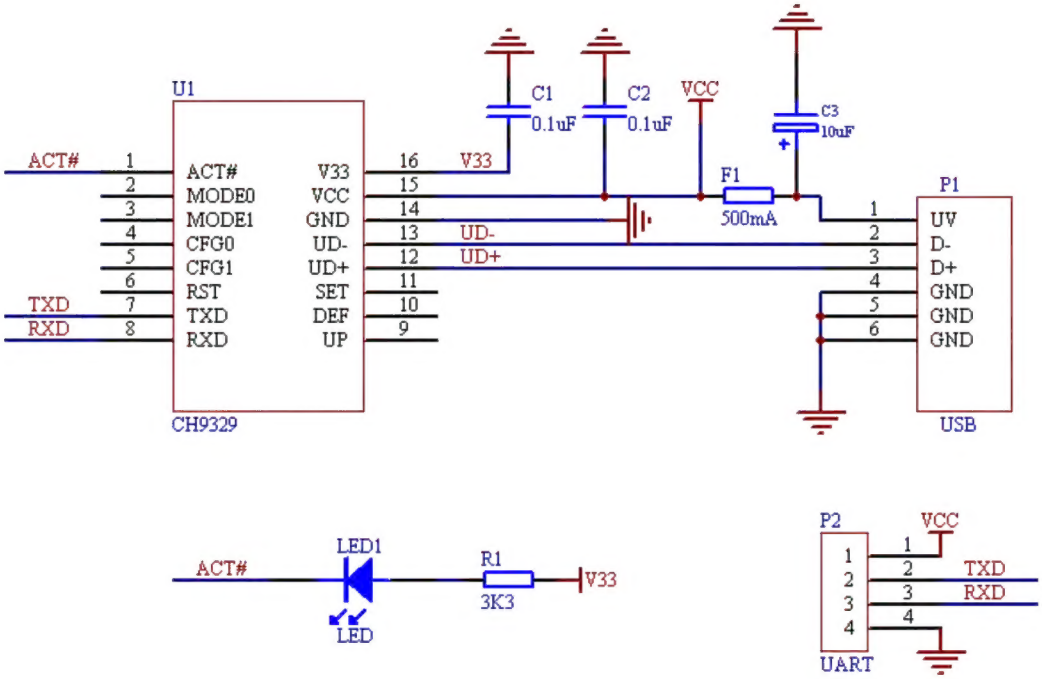
When designing the PCB, pay attention to: decoupling capacitors C1 and C2 get as close to connected pins of CH9329, making sure D+ and D- signals are close to the parallel wiring and providing ground or copper on both sides to reduce signal interference from the outside. In order to reduce the high frequency interference, arranging the ground or copper around the relevant components.